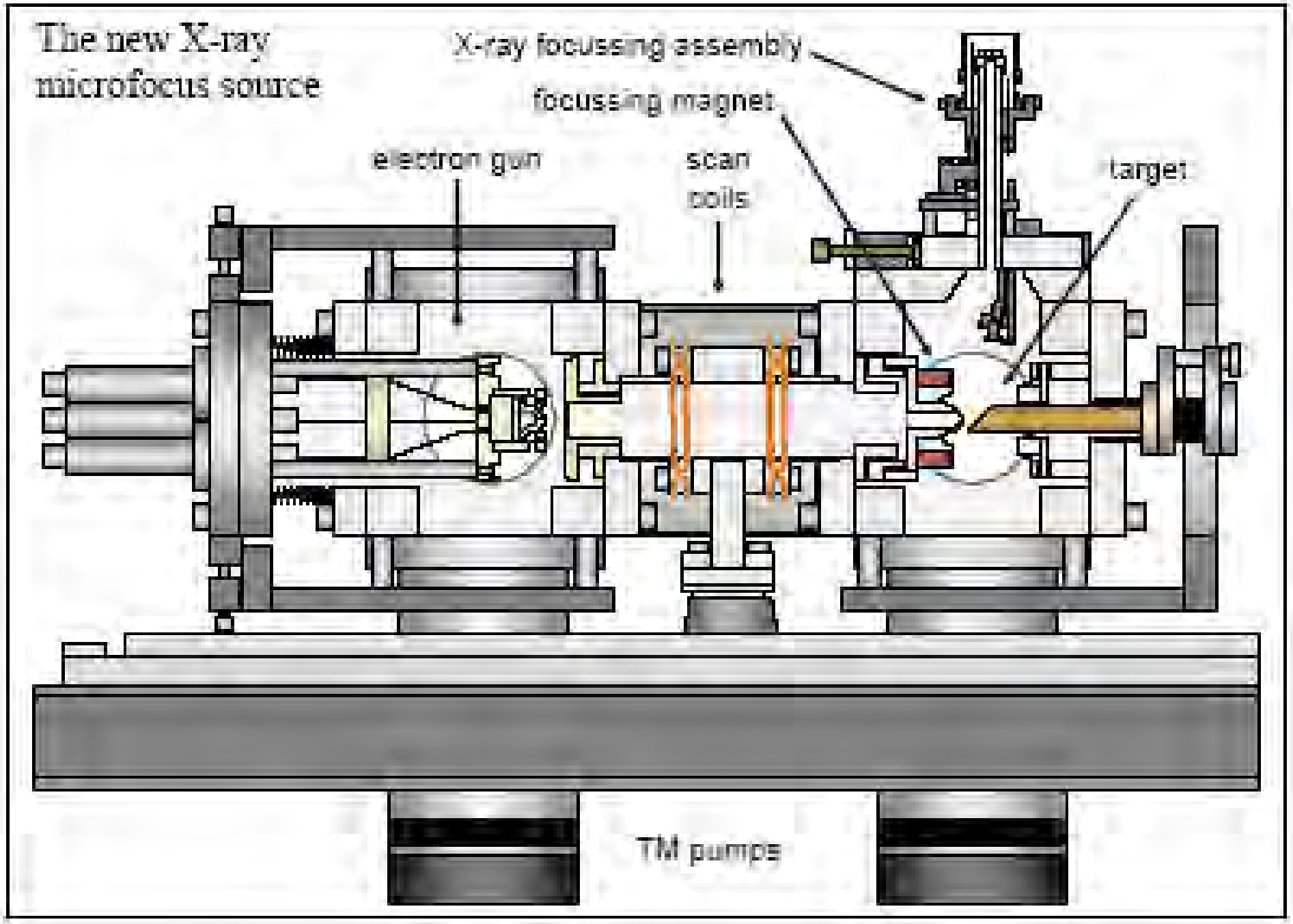
The new X-ray microfocus source
X-ray focussing assembly
focussing magnet
electron gun
scan coils
target
TM pumps